STATION		BOEING CARD NO.
TAIL NO.	SAS BOEING 767 TASK CARD	33-001-01
DATE		AIRLINE CARD NO.

SKILL	WORK AREA	RELATED TASK	INTERVAL	PHASE	MPD REV	TASK CARD REVISION
ELECT	FUSELAGE	W-33-001-02	1A	10101	013	AUG 22/09

TASK	TITLE	STRUCTURAL ILLUSTRATION REFERENCE	APPLICABILITY AIRPLANE	APPLICABILITY ENGINE
OPERATIONAL	EMERGENCY LIGHTS		PASS	ALL

ZONES	ACCESS PANELS
200	

MECH	INSP	MPD ITEM NUMBER

OPERATIONALLY CHECK EMERGENCY LIGHTS USING TEST SWITCHES. 33-51-00-5A

1. ON PASSENGER AIRPLANES;
   Emergency Lights - Operational Test with the Test Switches

   A. References

      (1) SSM 33-50-00 thru SSM 33-51-01

      (2) WDM 33-51-11 thru WDM 33-51-51

   B. Procedure

      (1) Do a test of the interior emergency lights.

         (a) Do the steps which follow for each attendant's test switch:

            1) At the attendant's panel, set the test switch for the emergency lights to the on position.

               a) Make sure the emergency lights in the passenger compartment come on, and then go off automatically after approximately one minute.

               NOTE: AIRPLANES WITH AN ELECTROLUMINESCENT FLOOR PROXIMITY LIGHTING SYSTEM;
               The floor proximity lighting system will stay off in this test.

      (2) Do a test of the exterior emergency lights.

         (a) At the APU shutdown panel, P40, on the nose gear, set the test switch to the on position for the right side lights.

BOEING PROPRIETARY - Copyright (C) - Unpublished Work - See title page for details.

MECH	INSP

1) Make sure the exterior emergency lights on the right side of the airplane come on and go off correctly.

NOTE: The emergency lights will automatically go off after approximately one minute.

(b) At the P40 panel, set the test switch to the on position for the left side lights.

1) Make sure the exterior emergency lights on the left side of the airplane come on and go off correctly.

NOTE: The emergency lights will automatically go off after approximately one minute.

BOEING PROPRIETARY - Copyright (C) - Unpublished Work - See title page for details.

SKILL	WORK AREA	RELATED TASK	INTERVAL	PHASE	MPD REV	TASK CARD REVISION
ELECT	FUSELAGE		4C	14848	013	AUG 22/08

TASK	TITLE	STRUCTURAL ILLUSTRATION REFERENCE	APPLICABILITY AIRPLANE	APPLICABILITY ENGINE
FUNCTIONAL	SELF-ILLUMINATED EXIT SIGNS		PASS	ALL

ZONES	ACCESS PANELS
200	

MECH | INSP | MPD ITEM NUMBER

FUNCTIONALLY CHECK THE SELF-ILLUMINATED EXIT SIGNS (DISCARD WHEN ILLUMINATION IS BELOW REQUIRED MINIMUM). 33-51-02-2A

1. AIRPLANES WITH A SELF-ILLUMINATED EXIT SIGN;
   Self-Illuminated Exit Sign - Operational Test

   A. Equipment

      (1) CAN-DB-45-3 or DB-45-B3 - Comparator
      Self-Powered Lighting, Inc.
      8 Westchester Plaza
      Elmsford, New York 10523-1604
      U.S.A.

      Telephone: (914) 592-8230
      FAX: (914) 592-8435

      NOTE: For an accurate test of the sign, the light in the comparator must be a minimum of 250 microlamberts. The intensity of the light in the comparator slowly decreases. Replace the light in the comparator when its intensity is not sufficient for an accurate test.

   B. Procedure

      WARNING: SELF-ILLUMINATED EXIT SIGNS CONTAIN A RADIOACTIVE GAS. IF A SIGN BREAKS, THE GAS CAN COME OUT. DO NOT BREATHE THE GAS. DO NOT LET THE GAS TOUCH YOUR SKIN. GO AWAY FROM THE SIGN UNTIL IT IS SAFE TO REPLACE IT. RADIOACTIVE GAS IS DANGEROUS AND CAN CAUSE INJURY.

      (1) Examine the sign for cracks and holes.

BOEING PROPRIETARY - Copyright (C) - Unpublished Work - See title page for details.

MECH	INSP

(a) If the sign is damaged, replace it.

1) Do this task to replace the sign: " Self-Illuminated Exit Sign - Replacement".

(2) Do a lighting intensity test.

(a) Use the comparator to compare the intensity of the sign with the intensity of the light in the comparator.

(b) If the lighting in the comparator is brighter than the lighting from the sign, replace the sign.

1) Do this task to replace the sign: "Self-Illuminated Exit Sign - Replacement".

2. AIRPLANES WITH A SELF-ILLUMINATED EXIT SIGN;
<u>Self-Illuminated Exit Sign - Replacement</u>

A. Equipment

(1) Rubber gloves

(2) Plastic bag to hold the sign

(3) Metal container for the discarded sign

(4) Soft material to pack the sign in the container

B. References

(1) AMM 20-10-18/201, Radioluminous Materials

(2) AMM 21-00-00/201, Air Conditioning - General

C. Replace the Signs not Damaged

(1) Supply conditioned air to airplane (AMM 21-00-00/201).

(2) Make sure that the passenger cabin recirculated air is off (AMM 21-25-00/101).

(3) Replace the signs not damaged as follows:

BOEING PROPRIETARY - Copyright (C) - Unpublished Work - See title page for details.

MECH	INSP

WARNING: LEAVE THE LOCATION IMMEDIATELY IF A SIGN IS CRACKED OR BROKEN. EXPOSURE TO RADIOACTIVE GAS MAY CAUSE INJURY TO PERSONS. MAKE SURE THE AIR DISTRIBUTION SYSTEM OPERATES CONTINUOUSLY. AFTER APPROXIMATELY 20 MINUTES, REMOVE THE SIGN AS TOLD.

(a) Remove the mounting screws and the sign.

(b) Seal the sign in soft material.

(c) Put the sign in a solid container.

(d) Close and seal the container.

NOTE: Until you can discard the container, keep the container where there is good airflow. Keep persons away from the container.

1) Make sure the container has a label on the outer side to identify its dangerous radioactive contents.

(e) Discard the container (AMM 20-10-18/201).

NOTE: Make sure you obey all local government regulations about radioactive materials.

(f) Install a new sign with mounting screws.

1) Make sure the sign is not damaged.

(4) Remove the conditioned air from the airplane if it is no longer necessary (AMM 21-00-00/201).

D. Replace a Cracked or Broken Sign

(1) Supply conditioned air to the airplane (AMM 21-00-00/201).

(2) Replace the damaged signs as follows:

WARNING: DO NOT TOUCH THE SIGNS MORE THAN NECESSARY. TOO MUCH EXPOSURE TO RADIOACTIVE GAS MAY CAUSE INJURY TO PERSONS.

BOEING PROPRIETARY - Copyright (C) - Unpublished Work - See title page for details.

MECH	INSP

(a) Put the rubber gloves on.

(b) Remove the sign.

(c) Put it in a plastic bag.

(d) Keep the bag open.

(e) Immediately put the sign, the plastic bag, and the rubber gloves in a location open to the air away from persons.

(f) Keep the sign, the plastic bag, and the rubber gloves open to the air for approximately 2 hours.

(g) After 2 hours, seal the bag.

(h) Seal the sign, the bag, and the rubber gloves in a sealed metal container.

NOTE: Until you can discard the container, keep the container where there is good airflow. Keep persons away from the container.

1) Make sure the container has a label on the outer side to identify its dangerous radioactive contents.

(i) Discard the container (AMM 20-10-18/201).

NOTE: Make sure you obey all local government regulations about radioactive materials.

(j) Install a new sign.

1) Make sure the sign is not damaged.

(3) Remove the conditioned air from the airplane if it is no longer necessary (AMM 21-00-00/201).

BOEING PROPRIETARY - Copyright (C) - Unpublished Work - See title page for details.

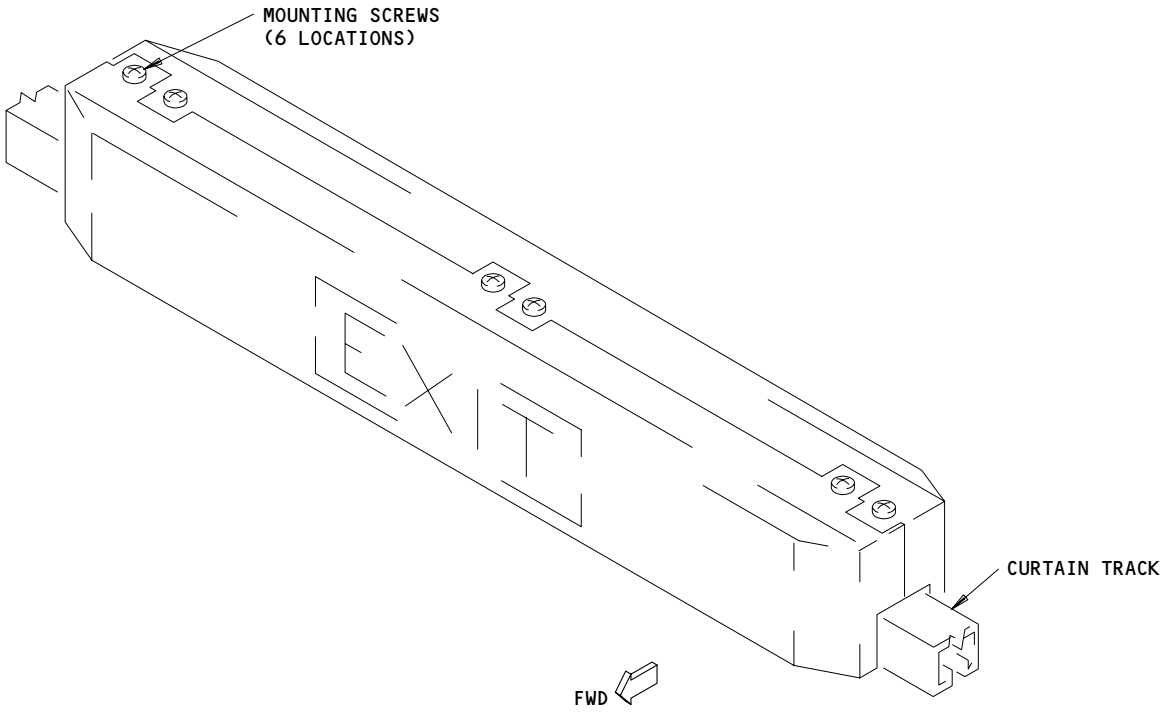

SELF ILLUMINATED EXIT SIGN
(EXAMPLE)

Self-Illuminated Exit Signs
Figure 201

BOEING PROPRIETARY - Copyright (C) - Unpublished Work - See title page for details.

SKILL	WORK AREA	RELATED TASK	INTERVAL	PHASE	MPD REV	TASK CARD REVISION
ELECT	FUSELAGE	W-33-001-01	2C	12424	013	APR 22/00

TASK	TITLE	STRUCTURAL ILLUSTRATION REFERENCE	APPLICABILITY AIRPLANE	APPLICABILITY ENGINE
RESTORE	EMERGENCY LIGHT POWER SUPPLIES		NOTE	ALL

ZONES	ACCESS PANELS
200	

MECH | INSP | MPD ITEM NUMBER

RESTORE EMERGENCY LIGHT POWER SUPPLIES TO REQUIRED STANDARD BY DEEP CYCLING (RECONDITIONING) THE NI-CAD BATTERIES. 33-51-07-2A

AIRPLANE NOTE: AIRPLANES WITHOUT THE LSI POWER SUPPLY FOR EMERGENCY EXIT LIGHTING.

AIRPLANE NOTE: THIS TASK IS APPLICABLE TO ALL AIRPLANE MODELS EXCEPT THE 767-400ER.

THE FOLLOWING PROCEDURE PERMITS RECONDITIONING (DEEP CYCLING) THE POWER SUPPLY WITHOUT REMOVING IT FROM THE AIRPLANE. AS AN OPTION, THE POWER SUPPLY CAN BE REMOVED FROM AIRPLANE AND RECONDITIONED IN THE SHOP USING THE PROCEDURE IN THE VENDOR'S COMPONENT MAINTENANCE MANUAL.

1. Battery Pack Capacity Test (Deep Cycle)

A. References

(1) AMM 24-22-00/201, Electrical Power-Control

B. Procedure

(1) Do these steps to do the battery pack capacity test:

(a) Set the emergency light switch on the pilots' overhead panel, P5, to the ON position.

1) Make sure each emergency light comes on for 15 minutes or more before it goes off.

NOTE: Each power supply causes its group of emergency lights to go off automatically when its battery pack cannot supply sufficient electrical power.

BOEING PROPRIETARY - Copyright (C) - Unpublished Work - See title page for details.

(b) Set the switch to the OFF position.

(c) If there are emergency lights that did not stay on for 15 minutes or more, then either do the task to replace the faulty battery pack or do the following steps:

1) Supply electrical power for 16 hours to fully charge the batteries (AMM 24-22-00/201).

2) Set the emergency light switch on the pilots' overhead panel, P5, to the ON position.

a) Make sure each emergency light comes on for 15 minutes or more before it goes off.

3) If there are emergency lights that did not stay on for 15 minutes or more, then do the task to replace the faulty battery pack.

(d) To prepare the airplane for flight, supply electrical power for 16 hours to fully charge the batteries (AMM 24-22-00/201).

2. Battery Pack - Removal (Fig. 201)

A. References

(1) AMM 25-25-01/201, Passenger Seats

(2) AMM 25-21-01/401, Sidewall Panels

(3) SSM 33-51-01

(4) WDM 33-51-11 thru 33-51-99

B. Battery Pack Removal

(1) Open these circuit breakers and attach DO-NOT-CLOSE tags:

(a) Circuit Breaker Panel Assembly, P11

1) 11B06, PORT EMER LT CHGR

2) 11P35, EMER LTS/OFF-WG ESC L

3) 11P36, EMER LTS/OFF-WG ESC R

BOEING PROPRIETARY - Copyright (C) - Unpublished Work - See title page for details.

MECH	INSP

(2) Get access to the power supply (SSM 33-51-01).

NOTE: There is usually a placard to identify the location of the power supply.

(a) For a power supply behind an air grille below the sidewall, do these steps:

1) Release each fastener on the air grille.

2) Remove the air grille.

(b) For a power supply behind a sidewall, do these steps:

1) Remove the passenger seats to get access to the sidewall panel (AMM 25-25-01/201).

2) Remove the sidewall panel over the power supply (AMM 25-21-01/401).

(c) For a power supply below an attendant seat, do these steps:

1) Open the access panel at the bottom of the attendant seat installation.

(d) For a power supply below a floor board, do these steps:

1) Pull back the carpet to get to the access panel.

2) Open the access panel to get to the power supply.

CAUTION: BEFORE YOU LIFT THE BACK END OF THE BATTERY PACK, MAKE SURE THE SOCKETS ARE CLEAR OF THE ELECTRONIC ASSEMBLY MATING PINS. FAILURE TO DO THIS MAY CAUSE DAMAGE TO THE MATING PINS AND/OR THE BATTERY PACK.

(3) Carefully remove the battery pack from the power supply.

(a) Turn the quarter turn fasteners on the battery pack counterclockwise until they stop.

(b) Carefully slide the battery pack away until the electrical sockets disconnect the electrical pins.

BOEING PROPRIETARY - Copyright (C) - Unpublished Work - See title page for details.

MECH	INSP

3. Battery Pack - Installation (Fig. 201)

A. General

(1) Before you install a new battery pack, you can do a test of the power supply with a voltmeter. This is to make sure the power supply will charge the new battery pack.

B. References

(1) AMM 25-21-01/401, Sidewall Panels

(2) AMM 25-25-01/201, Passenger Seats

(3) SSM 33-51-01

(4) WDM 33-51-11 thru 33-51-99

C. Battery Pack Installation

(1) Make sure that these circuit breakers are open with DO-NOT-CLOSE tags attached:

(a) Circuit Breaker Panel Assembly, P11

1) 11B06, PORT EMER LT CHGR

2) 11P35, EMER LTS/OFF-WG ESC L

3) 11P36, EMER LTS/OFF-WG ESC R

(2) If it is necessary to know if the power supply can charge the new batteries, then do this test of the power supply:

(a) Connect a resistor between the probes of a voltmeter.

NOTE: Use a 22 ohm, 10 watt resistor.

(b) With the voltmeter, make sure there is 8 volts dc between the battery connector pins of the power supply.

(3) Carefully install the battery pack.

(a) Make sure the date on the tag of the new battery pack has not expired.

BOEING PROPRIETARY - Copyright (C) - Unpublished Work - See title page for details.

MECH	INSP

(b) Do not remove the tag from the battery pack.

(c) Carefully slide the battery pack into the power supply until the electrical sockets connect to the electrical pins.

(d) Turn each fastener to the detent position.

NOTE: You will hear a click when you reach the detent position.

(4) Remove the DO-NOT-CLOSE tags and close these circuit breakers:

(a) Circuit Breaker Panel Assembly, P11

1) 11B06, PORT EMER LT CHGR

2) 11P35, EMER LTS/OFF-WG ESC L

3) 11P36, EMER LTS/OFF-WG ESC R

D. Battery Pack Test

CAUTION: DO NOT LEAVE THE EMERGENCY LIGHTS ON FOR MORE THAN ONE MINUTE. TOO MUCH OPERATION MAY DISCHARGE THE BATTERIES.

(1) At the power supply, set the test switch to the on position.

(a) Make sure the emergency lights connected to the power supply come on correctly (SSM 33-51-01).

(b) Make sure the lights go off automatically after approximately one minute.

(2) Do one of these steps to install each part that was removed to get access to the power supply:

(a) Install the air grille.

(b) Install the sidewall panel (AMM 25-21-01/401) and the passenger seats (AMM 25-25-01/201).

(c) Close the access panel.

BOEING PROPRIETARY - Copyright (C) - Unpublished Work - See title page for details.

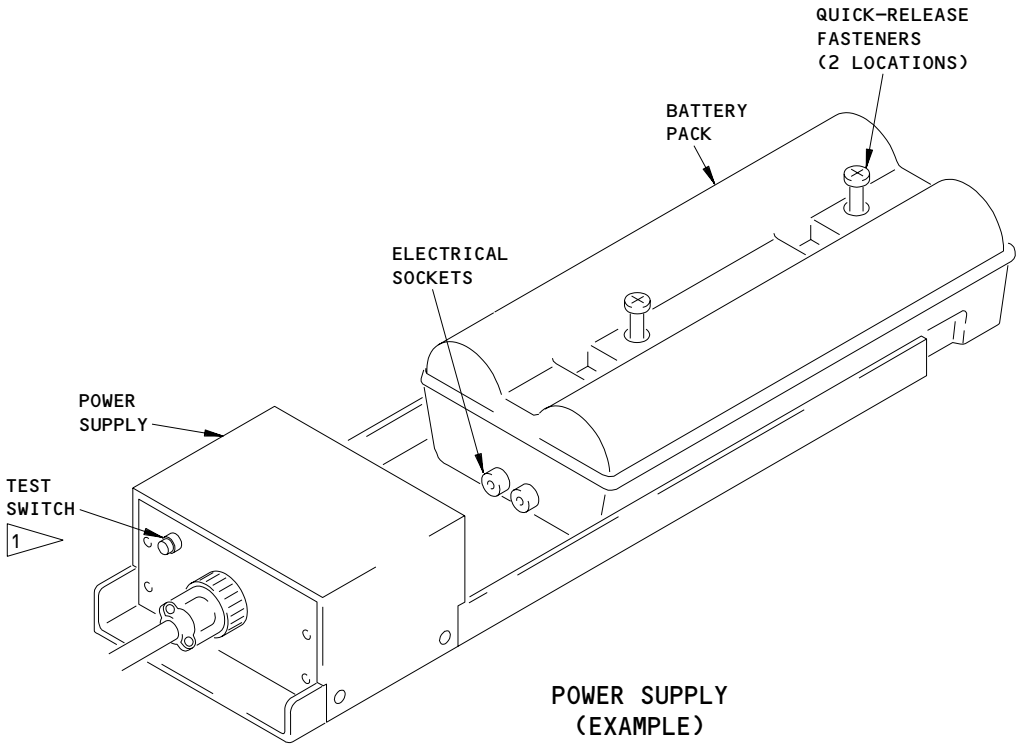

POWER SUPPLY (EXAMPLE)

1 NOT INSTALLED ON ALL POWER SUPPLIES

Emergency Light Power Supply Installation
Figure 201

BOEING PROPRIETARY - Copyright (C) - Unpublished Work - See title page for details.

SKILL	WORK AREA	RELATED TASK	INTERVAL	PHASE	MPD REV	TASK CARD REVISION
ELECT	FUSELAGE	W-33-001-01	2C	12424	013	APR 22/00

TASK	TITLE	STRUCTURAL ILLUSTRATION REFERENCE	APPLICABILITY AIRPLANE	APPLICABILITY ENGINE
RESTORE	EMERGENCY LIGHT POWER SUPPLIES		NOTE	ALL

ZONES	ACCESS PANELS
200	

MECH | INSP | MPD ITEM NUMBER

RESTORE EMERGENCY LIGHT POWER SUPPLIES TO REQUIRED STANDARD BY DEEP CYCLING (RECONDITIONING) THE NI-CAD BATTERIES. 33-51-07-2A

AIRPLANE NOTE: AIRPLANES WITH THE LSI POWER SUPPLY FOR EMERGENCY EXIT LIGHTING.

AIRPLANE NOTE: THIS TASK IS APPLICABLE TO ALL AIRPLANE MODELS EXCEPT THE 767-400ER.

THE FOLLOWING PROCEDURE PERMITS RECONDITIONING (DEEP CYCLING) THE POWER SUPPLY WITHOUT REMOVING IT FROM THE AIRPLANE. AS AN OPTION, THE POWER SUPPLY CAN BE REMOVED FROM AIRPLANE AND RECONDITIONED IN THE SHOP USING THE PROCEDURE IN THE VENDOR'S COMPONENT MAINTENANCE MANUAL.

1. Battery Capacity Test (Deep Cycle)

A. References

(1) AMM 24-22-00/201, Electrical Power-Control

B. Procedure

(1) Do these steps to do the battery capacity test:

(a) Set the emergency light switch on the pilots' overhead panel, P5, to the ON position.

1) Make sure each emergency light comes on for 15 minutes or more before it goes off.

NOTE: Each power supply causes its group of emergency lights to go off automatically when its battery cannot supply sufficient electrical power.

BOEING PROPRIETARY - Copyright (C) - Unpublished Work - See title page for details.

(b) Set the switch to the OFF position.

(c) If there are emergency lights that did not stay on for 15 minutes or more, then either do the task to replace the faulty battery or do the following steps:

1) Supply electrical power for 16 hours to fully charge the batteries (AMM 24-22-00/201).

2) Set the emergency light switch on the pilots' overhead panel, P5, to the ON position.

a) Make sure each emergency light comes on for 15 minutes or more before it goes off.

3) If there are emergency lights that did not stay on for 15 minutes or more, then do the task to replace the faulty battery.

(d) To prepare the airplane for flight, supply electrical power for 16 hours to fully charge the batteries (AMM 24-22-00/201).

2. <u>Battery - Removal (Fig. 201)</u>

A. References

(1) AMM 25-25-01/201, Passenger Seats

(2) AMM 25-21-01/401, Sidewall Panels

(3) SSM 33-51-01

(4) WDM 33-51-11 thru 33-51-99

B. Battery Removal

(1) Open these circuit breakers and attach DO-NOT-CLOSE tags:

(a) Circuit Breaker Panel Assembly, P11

1) 11B06, PORT EMER LT CHGR

2) 11P35, EMER LTS/OFF-WG ESC L

3) 11P36, EMER LTS/OFF-WG ESC R

BOEING PROPRIETARY - Copyright (C) - Unpublished Work - See title page for details.

MECH	INSP

(2) Get access to the power supply (SSM 33-51-01).

NOTE: There is usually a placard to identify the location of the power supply.

(a) For a power supply behind an air grille below the sidewall, do these steps:

1) Release each fastener on the air grille.

2) Remove the air grille.

(b) For a power supply behind a sidewall, do these steps:

1) Remove the passenger seats to get access to the sidewall panel (AMM 25-25-01/201).

2) Remove the sidewall panel over the power supply (AMM 25-21-01/401).

(c) For a power supply below an attendant seat, do these steps:

1) Open the access panel at the bottom of the attendant seat installation.

(d) For a power supply below a floor board, do these steps:

1) Pull back the carpet to get to the access panel.

2) Open the access panel to get to the power supply.

CAUTION: DO NOT OPERATE THE POWER SUPPLY WITH THE BATTERY DISCONNECTED. DAMAGE TO THE INTERNAL LOGIC MAY RESULT.

(3) Carefully remove the battery from the power supply.

(a) Remove the six screws from the top of the cover.

(b) Remove the cover.

(c) Remove the battery to access the battery clip.

BOEING PROPRIETARY - Copyright (C) - Unpublished Work - See title page for details.

MECH	INSP

CAUTION: DO NOT SHORT CIRCUIT THE BATTERY TERMINALS. BURNS MAY OCCUR.

(d) Disconnect the battery clip from the battery terminals.

(e) Remove the battery.

3. Battery - Installation (Fig. 201)

A. References

(1) AMM 25-21-01/401, Sidewall Panels

(2) AMM 25-25-01/201, Passenger Seats

(3) SSM 33-51-01

(4) WDM 33-51-11 thru 33-51-99

B. Battery Installation

(1) Make sure that these circuit breakers are open with DO-NOT-CLOSE tags attached:

(a) Circuit Breaker Panel Assembly, P11

1) 11B06, PORT EMER LT CHGR

2) 11P35, EMER LTS/OFF-WG ESC L

3) 11P36, EMER LTS/OFF-WG ESC R

(2) Carefully install the new battery.

(a) Make sure the date on the tag of the new battery has not expired.

(b) Do not remove the tag from the battery.

(c) Connect the battery clip to the battery terminals.

(d) Install the battery into the power supply.

(e) Put the cover on the top of the power supply.

BOEING PROPRIETARY - Copyright (C) - Unpublished Work - See title page for details.

(f) Install the six screws into the cover of the power supply.

(3) Remove the DO-NOT-CLOSE tags and close these circuit breakers:

(a) Circuit Breaker Panel Assembly, P11

1) 11B06, PORT EMER LT CHGR

2) 11P35, EMER LTS/OFF-WG ESC L

3) 11P36, EMER LTS/OFF-WG ESC R

C. Battery Test

CAUTION: DO NOT LEAVE THE EMERGENCY LIGHTS ON FOR MORE THAN ONE MINUTE. TOO MUCH OPERATION MAY DISCHARGE THE BATTERIES.

(1) At the overhead panel, P5, or the attendant's panel, set the switch for the emergency lights to the on position.

NOTE: The test switches on the attendant's panels will not operate the escape path lights.

(a) Make sure the emergency lights connected to the power supply come on correctly (SSM 33-51-01).

(2) Set the switch to the off position.

(a) Make sure the emergency lights go off.

(3) Do one of these steps to install each part that was removed to get access to the power supply:

(a) Install the air grille.

(b) Install the sidewall panel (AMM 25-21-01/401) and the passenger seats (AMM 25-25-01/201).

(c) Close the access panel.

BOEING PROPRIETARY - Copyright (C) - Unpublished Work - See title page for details.

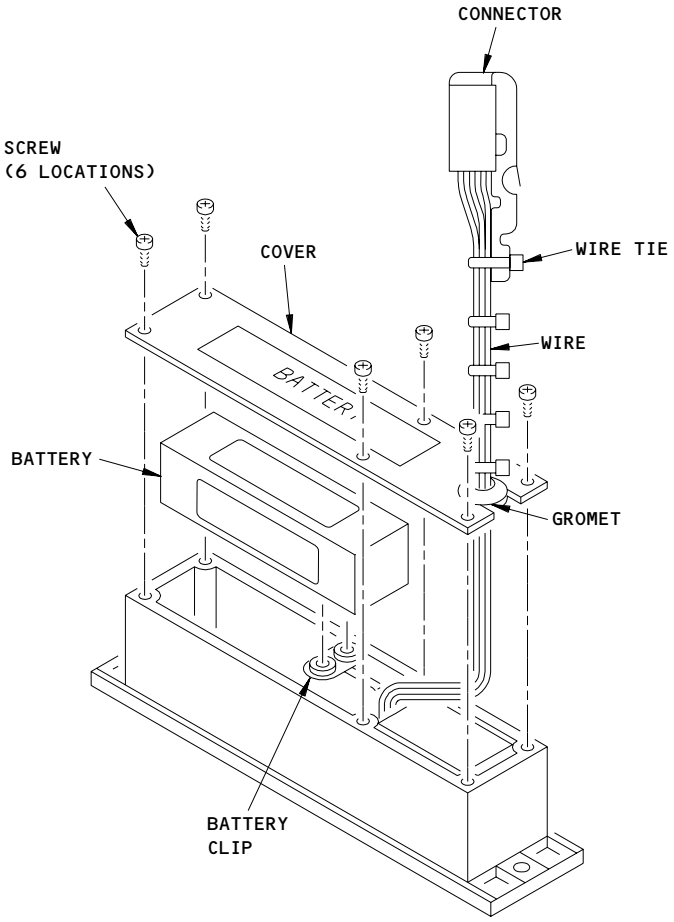

POWER SUPPLY
(EXAMPLE)

Emergency Light Power Supply Installation
Figure 201

BOEING PROPRIETARY - Copyright (C) - Unpublished Work - See title page for details.

STATION		BOEING CARD NO.
TAIL NO.	SAS BOEING 767 TASK CARD	33-004-C1
DATE		AIRLINE CARD NO.

SKILL	WORK AREA	RELATED TASK	INTERVAL	PHASE	MPD REV	TASK CARD REVISION
AVION	CREW CABIN		1A	10101	012	DEC 22/00

TASK	TITLE	STRUCTURAL ILLUSTRATION REFERENCE	APPLICABILITY AIRPLANE	APPLICABILITY ENGINE
OPERATIONAL	MASTER DIM & TEST		NOTE	ALL

ZONES	ACCESS PANELS
211	

MECH	INSP	MPD ITEM NUMBER

AIRPLANE NOTE: THIS TASK IS APPLICABLE TO ALL AIRPLANE MODELS EXCEPT THE 767-400ER. — 33-16-00-5A, 22-10-00-5A

OPERATIONALLY CHECK THE A/P DISC ANNUNCIATOR INDICATOR BY PRESSING MASTER DIM AND TEST SWITCH. — 22-10-00-5A, 22-10-00-5B, 22-32-00-5A, 30-31-00-A

OPERATIONALLY CHECK THE AUTOPILOT ANNUNCIATOR INDICATOR BY PRESSING MASTER DIM AND TEST SWITCH. — 22-10-00-5B, 31-51-00-5A, 34-16-00-5A

OPERATIONALLY CHECK THE A/T DISC ANNUNCIATOR INDICATOR BY PRESSING MASTER DIM AND TEST SWITCH. — 22-32-00-5A

OPERATIONALLY CHECK THE PITOT STATIC PROBE HEAT ANNUNCIATOR LIGHTS BY PRESSING MASTER DIM AND TEST SWITCH. — 30-31-00-A

OPERATIONALLY CHECK THE MASTER CAUTION AND MASTER WARNING LIGHTS INDICATOR BY PRESSING MASTER DIM AND TEST SWITCH. — 31-51-00-5A

OPERATIONALLY CHECK THE CAUTION AND INDICATOR LIGHTS BY PRESSING MASTER DIM AND TEST SWITCH. — 33-16-00-5A

OPERATIONALLY CHECK THE ALT ALERT ANNUNCIATOR INDICATOR BY PRESSING MASTER DIM AND TEST SWITCH. — 34-16-00-5A

1. Master Dim and Test - Operational Test

   A. General

      (1) This test makes sure the master dim and test system operates.

   B. References

      (1) AMM 21-58-00/501, Equipment Cooling System

BOEING PROPRIETARY - Copyright (C) - Unpublished Work - See title page for details.

(2) AMM 24-22-00/201, Electrical Power - Control

(3) AMM 31-31-00/501, Flight Data Recorder - Adjustment/Test

(4) SSM 33-16-01

(5) WDM 33-16-11 thru 33-16-99

C. Equipment

(1) Cover - Windshield Backout Screen (commercially available), Optional

D. Access

(1) Location Zones
211/212 Flight Compartment

E. Prepare for the Test

(1) Supply electrical power (AMM 24-22-00/201).

(2) Make sure the equipment cooling system operates (AMM 21-58-00/501).

(3) Make sure the flight data recorder system operates (AMM 31-31-00/501).

(4) On a bright day, put a cover on the windshield to make it easier to do this test.

(5) At the overhead panel, P5, make sure the light override switch is in the off mode.

F. Procedure

(1) At the P5 panel, set the switch for the indicator lights to the bright mode.

(2) Put the adjacent test switch to the on mode.

(a) Make sure the annunciators (lights and switches) connected to the master dim and test system come on brightly.

NOTE: Use SSM 33-16-01 to identify the annunciators.

(3) Set the switch for the indicator lights to the dim mode.

BOEING PROPRIETARY - Copyright (C) - Unpublished Work - See title page for details.

MECH	INSP

(a) Make sure the annunciators (lights and switches) connected to the master dim and test system become dim.

(4) When the test is done, put the test switch in the off mode.

(5) Set the switch for the indicator lights to the usual mode.

G. Put the Airplane Back to Its Usual Condition

(1) If a cover was used on the windshield, remove it.

(2) Remove electrical power if it is not necessary (AMM 24-22-00/201).

BOEING PROPRIETARY - Copyright (C) - Unpublished Work - See title page for details.

STATION		BOEING CARD NO.
TAIL NO.	SAS BOEING 767 TASK CARD	33-006-01
DATE		AIRLINE CARD NO.

SKILL	WORK AREA	RELATED TASK	INTERVAL	PHASE	MPD REV	TASK CARD REVISION
ELECT	FUSELAGE	W-33-001-01	1C	11212	002	AUG 22/09

TASK	TITLE	STRUCTURAL ILLUSTRATION REFERENCE	APPLICABILITY AIRPLANE	APPLICABILITY ENGINE
OPERATIONAL	EMERGENCY LIGHTS		PASS	ALL

ZONES	ACCESS PANELS
200	

MECH	INSP	MPD ITEM NUMBER

OPERATIONALLY CHECK EMERGENCY LIGHTS USING CONTROL SWITCHES. 33-51-00-5B

1. Emergency Lights - Operational Test with the Control Switches

A. General

(1) The control switches for the emergency lights are in the flight compartment and the passenger compartment. These switches are referred to as the pilot's switch and the attendant's switch.

B. References

(1) AMM 24-22-00/201, Electrical Power - Control

(2) SSM 33-51-00 thru SSM 33-51-01

(3) WDM 33-51-11 thru WDM 33-51-51

(4) WDM 91-01-27

C. Procedure for Passenger Airplanes

(1) Supply electrical power (AMM 24-22-00/201).

(2) Do a test of the emergency lights.

(a) At the overhead panel, P5, make sure the pilot's switch for the emergency lights is set to the off position.

CAUTION: DO NOT LEAVE THE EMERGENCY LIGHTS ON FOR MORE THAN 1 MINUTE. TOO MUCH OPERATION CAN REMOVE THE CHARGE FROM THE BATTERIES.

BOEING PROPRIETARY - Copyright (C) - Unpublished Work - See title page for details.

MECH	INSP

(b) On the emergency exit light in the flight compartment, set the switch to the on position.

1) Quickly make sure the emergency exit light comes on.

(c) On the emergency exit light, set the switch to the armed position.

1) Make sure the emergency exit light goes off.

(d) Do the steps which follow for each attendant's switch:

CAUTION: DO NOT LEAVE THE EMERGENCY LIGHTS ON FOR MORE THAN 1 MINUTE. TOO MUCH OPERATION CAN REMOVE THE CHARGE FROM THE BATTERIES.

1) At the attendant's panel, set the attendant's switch for the emergency lights to the on position.

a) Quickly make sure the emergency lights come on.

2) Set the attendant's switch to the off position.

a) Make sure the emergency lights go off.

(e) Set the pilot's switch to the armed position.

(f) Do the steps which follow for each attendant's switch:

CAUTION: DO NOT LEAVE THE EMERGENCY LIGHTS ON FOR MORE THAN 1 MINUTE. TOO MUCH OPERATION CAN REMOVE THE CHARGE FROM THE BATTERIES.

1) Set the attendant's switch to the on position.

a) Quickly make sure the emergency lights come on.

2) Set the attendant's switch to the off position.

a) Make sure the emergency lights go off.

BOEING PROPRIETARY - Copyright (C) - Unpublished Work - See title page for details.

MECH	INSP

CAUTION: DO NOT LEAVE THE EMERGENCY LIGHTS ON FOR MORE THAN 1 MINUTE. TOO MUCH OPERATION CAN REMOVE THE CHARGE FROM THE BATTERIES.

(g) Set the pilot's switch to the on position.

1) Quickly make sure the UNARMED warning light adjacent to the switch comes on.

2) Quickly make sure the EICAS message EMER LIGHTS shows on the EICAS display.

3) Quickly make sure each emergency light is on.

(h) Set the pilot's switch to the armed position.

1) Make sure the UNARMED warning light goes off.

2) Make sure the EICAS message EMER LIGHTS does not show on the EICAS display.

3) Make sure each emergency light goes off.

(i) Set the pilot's switch to the off position.

1) Make sure the UNARMED warning light comes on.

2) Make sure the EICAS message EMER LIGHTS shows on the EICAS display.

3) Make sure the emergency lights stay off.

(3) Remove electrical power if it is not necessary (AMM 24-22-00/201).

BOEING PROPRIETARY - Copyright (C) - Unpublished Work - See title page for details.