ADSC SECTION: Page 43, AVDEC SECTION: Page 44, VD SECTION: Page 45,
AD SECTION: Page 46, FEP SECTION: Page 47, CPU SECTION: Page 48, ODC SECTION: Page 49

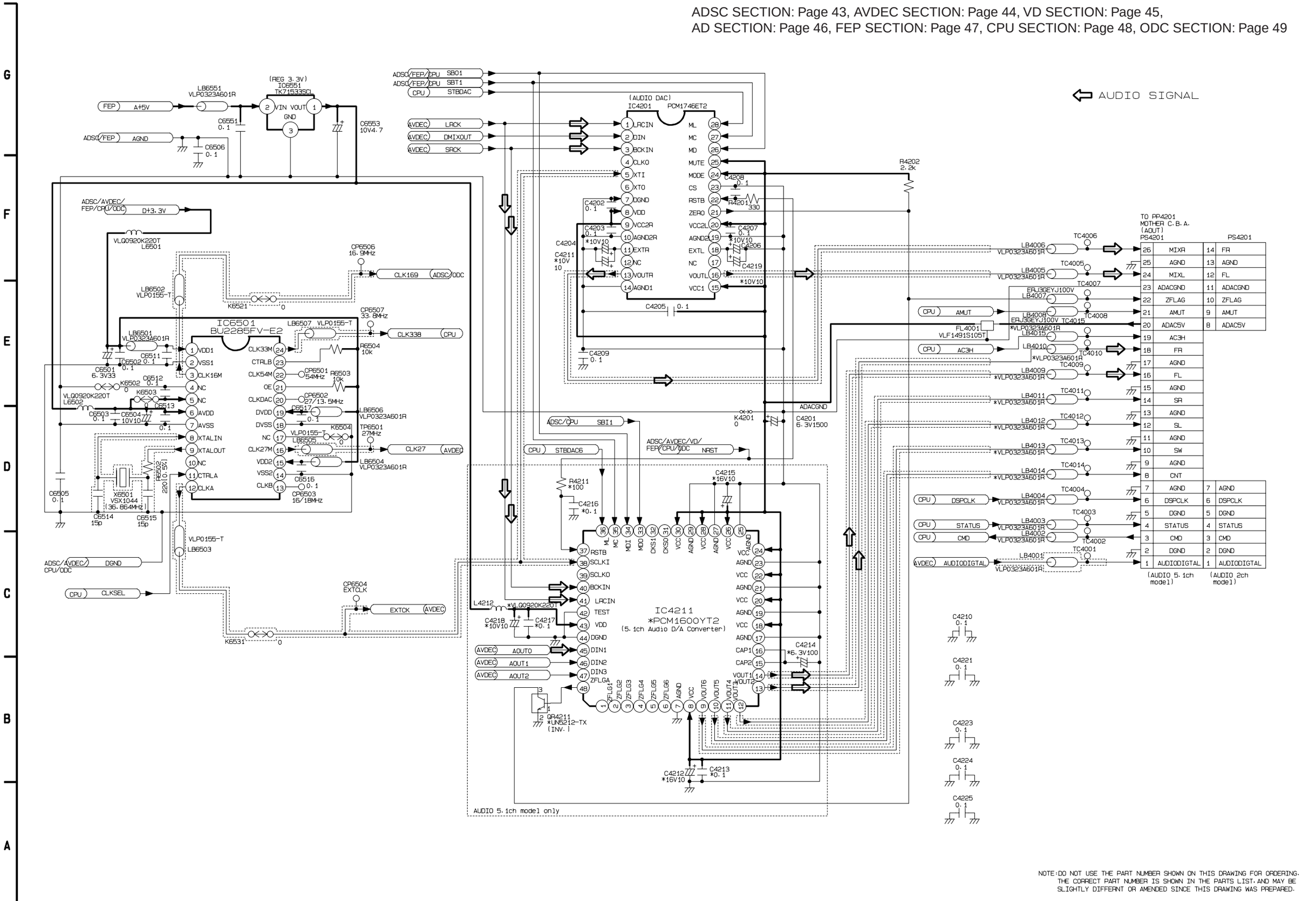

NOTE:DO NOT USE THE PART NUMBER SHOWN ON THIS DRAWING FOR ORDERING. THE CORRECT PART NUMBER IS SHOWN IN THE PARTS LIST. AND MAY BE SLIGHTLY DIFFERNT OR AMENDED SINCE THIS DRAWING WAS PREPARED.