US0D1076567S

(12) United States Design Patent

Chen et al.

(10) Patent No.: US D1,076,567 S
(45) Date of Patent: ** May 27, 2025

(54) **COOKING APPLIANCE**

(71) Applicant: **WHIRLPOOL CORPORATION**, Benton Harbor, MI (US)

(72) Inventors: **Crystal Chen**, Shenzhen (CN); **Shuibing Deng**, Shenzhen (CN); **Xiao Jun Guo**, Foshan (CN); **Natalie Anne Hillmann**, Chicago, IL (US); **XinFeng Huang**, Shenzhen (CN); **Yu Liu**, Benton Harbor, MI (US); **Joshua Wu**, Shenzhen (CN); **Xianjie Xu**, Shenzhen (CN); **XunCai Zhang**, Shenzhen (CN)

(73) Assignee: **WHIRLPOOL CORPORATION**, Benton Harbor, MI (US)

(**) Term: **15 Years**

(21) Appl. No.: **29/848,402**

(22) Filed: **Aug. 2, 2022**

(51) **LOC (15) Cl.** **07-02**

(52) **U.S. Cl.**
USPC **D7/351**

(58) **Field of Classification Search**
USPC D7/323, 339, 347, 348, 350.1–351, 354, D7/402, 405; D21/523–525
CPC A47J 37/0623; A47J 37/0629; A47J 37/0635; A47J 37/0641; A47J 37/0647; A47J 37/0652; A47J 37/0658; A47J 37/0664; F24C 7/00; F24C 7/02; F24C 7/04
See application file for complete search history.

(56) **References Cited**

U.S. PATENT DOCUMENTS

D436,793 S * 1/2001 Taira D7/351
D673,001 S * 12/2012 Becze D7/351
D733,485 S * 7/2015 Zhou D7/351
D781,638 S * 3/2017 Chung D7/351
D873,064 S * 1/2020 Kim D7/351
(Continued)

OTHER PUBLICATIONS

KitchenAid Over-The-Range Microwave with Flush B, Kitchen Aid [online], [site visited Aug. 5, 2024], Available from internet URL: https://www.kitchenaid.com/major-appliances/microwaves/over-the-range/p.over-the-range-microwave-with-flush-built-in-design.kmmf330pps.html (Year: 2024).*

Primary Examiner — Catherine Ho
Assistant Examiner — Natalya M Rapundalo
(74) *Attorney, Agent, or Firm* — Price Heneveld LLP

(57) **CLAIM**

The ornamental design for a cooking appliance as shown and described.

DESCRIPTION

FIG. **1** is a perspective view of a cooking appliance shown with a door thereof in a closed position;
FIG. **2** is a front elevation view thereof;
FIG. **3** is a back elevation view thereof;
FIG. **4** is a right side elevation view thereof;
FIG. **5** is a left side elevation view thereof;
FIG. **6** is a top plan view thereof;
FIG. **7** is a bottom plan view thereof;
FIG. **8** is a perspective view of the cooking appliance shown with the door in an open position;
FIG. **9** is a front elevation view thereof;
FIG. **10** is a back elevation view thereof;
FIG. **11** is a right side elevation view thereof;
FIG. **12** is a left side elevation view thereof;
FIG. **13** is a top plan view thereof; and,
FIG. **14** is a bottom plan view thereof.
The even dashed broken lines show portions of the cooking appliance and form no part of the claimed design.
The dot-dash broken lines illustrate the bounds of the claimed design and form no part thereof.
Oblique shading is used to represent surfaces that are transparent.

1 Claim, 14 Drawing Sheets

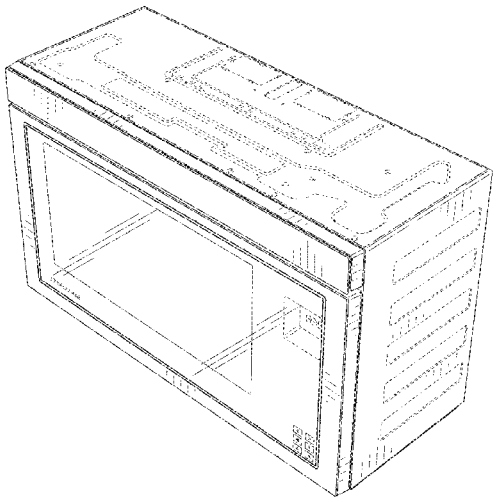

(56) **References Cited**

U.S. PATENT DOCUMENTS

D891,176	S	*	7/2020	Bergese	D7/405
D927,241	S	*	8/2021	Huang	D7/351
D957,359	S	*	7/2022	Horiuchi	D14/258
D960,629	S	*	8/2022	Huang	D7/351
D1,019,249	S	*	3/2024	Huang	D7/351
D1,021,510	S	*	4/2024	Huang	D7/349

* cited by examiner

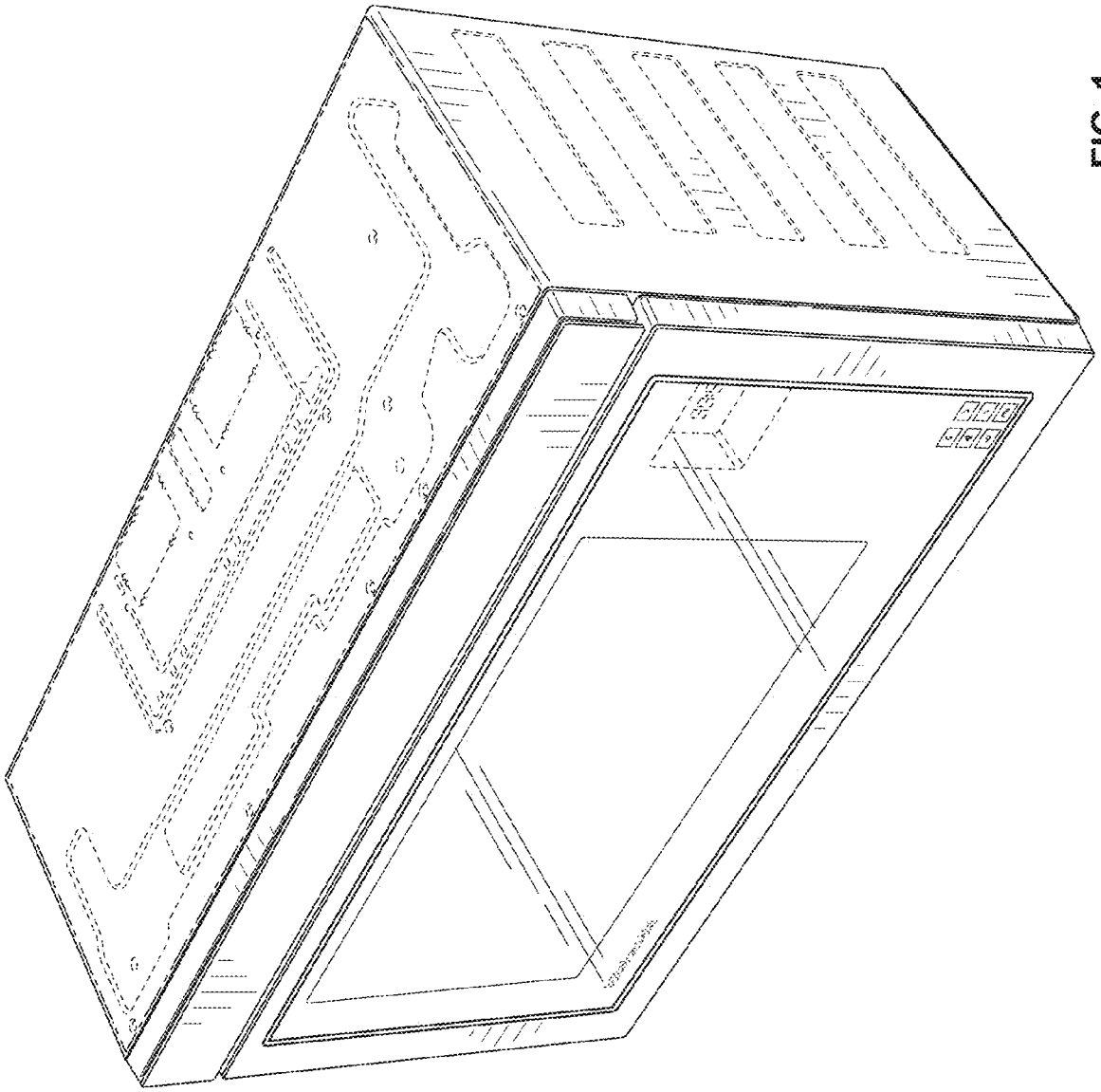

FIG. 1

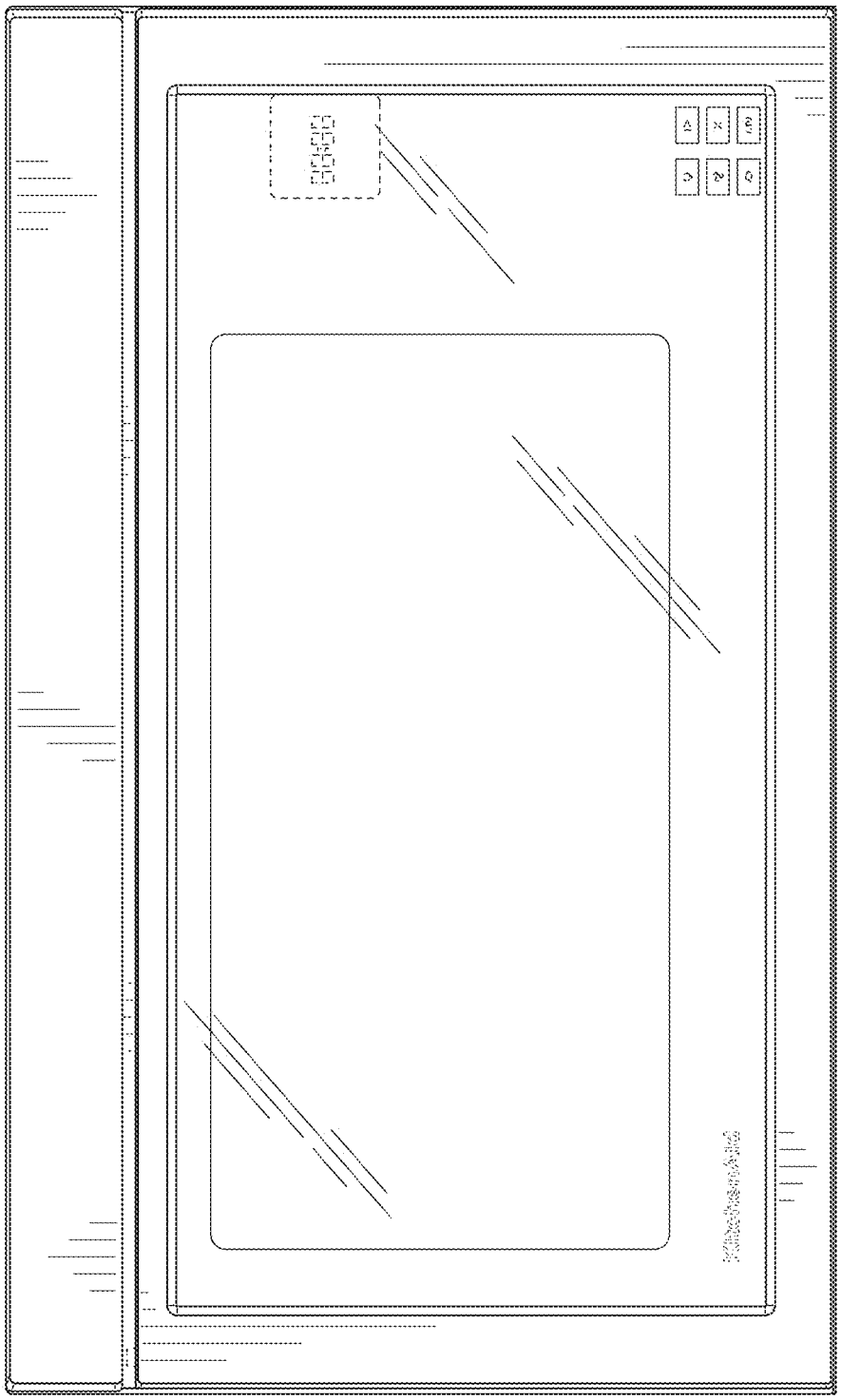

FIG. 2

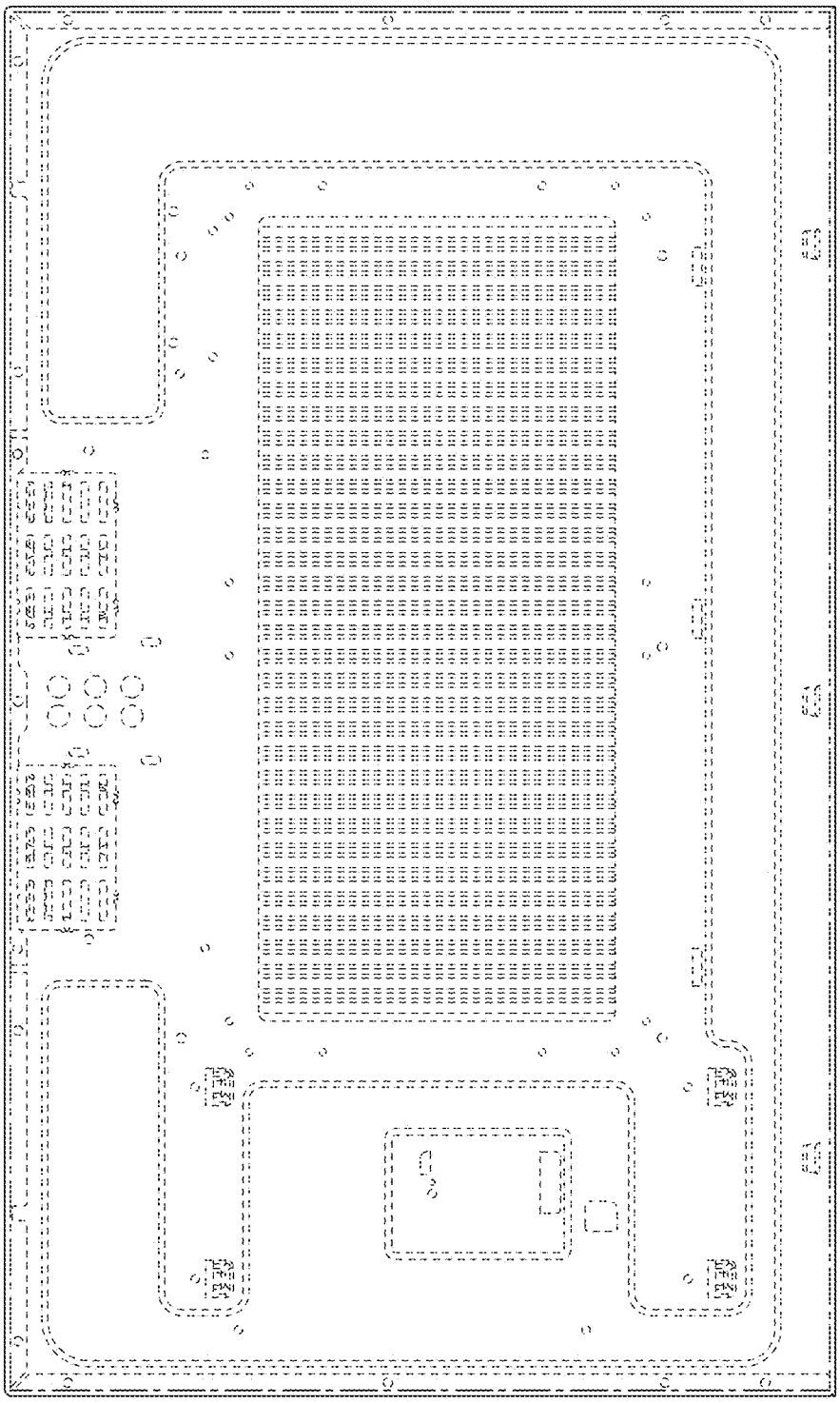

FIG. 3

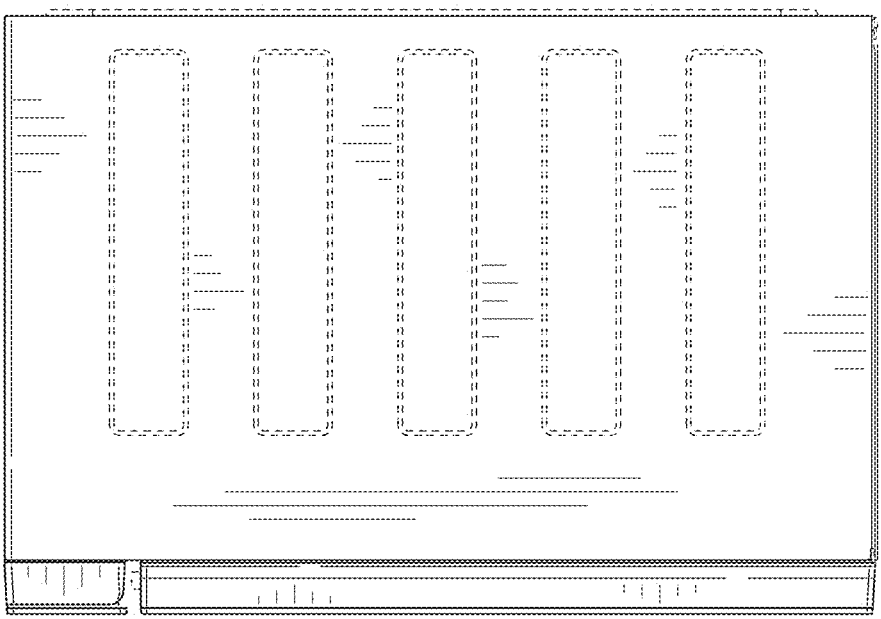

FIG. 4

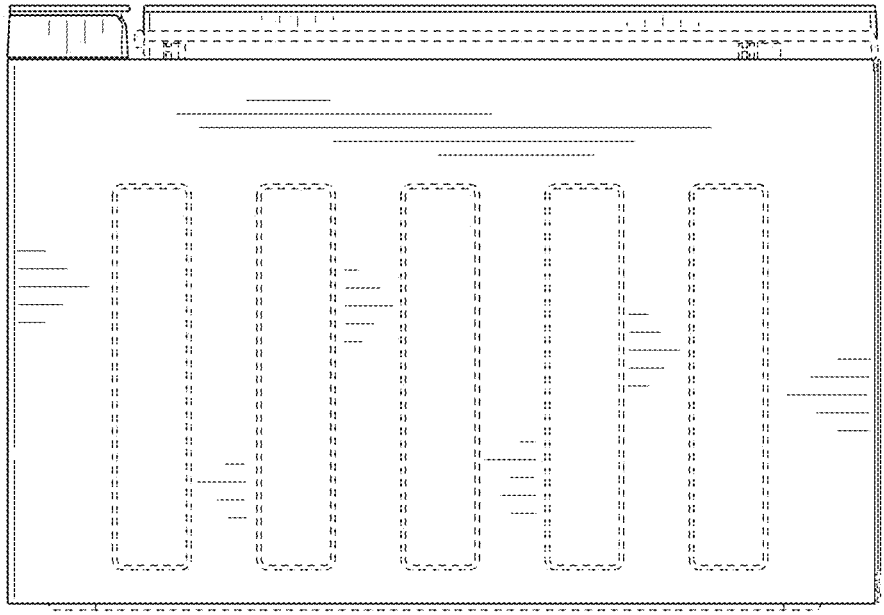

FIG. 5

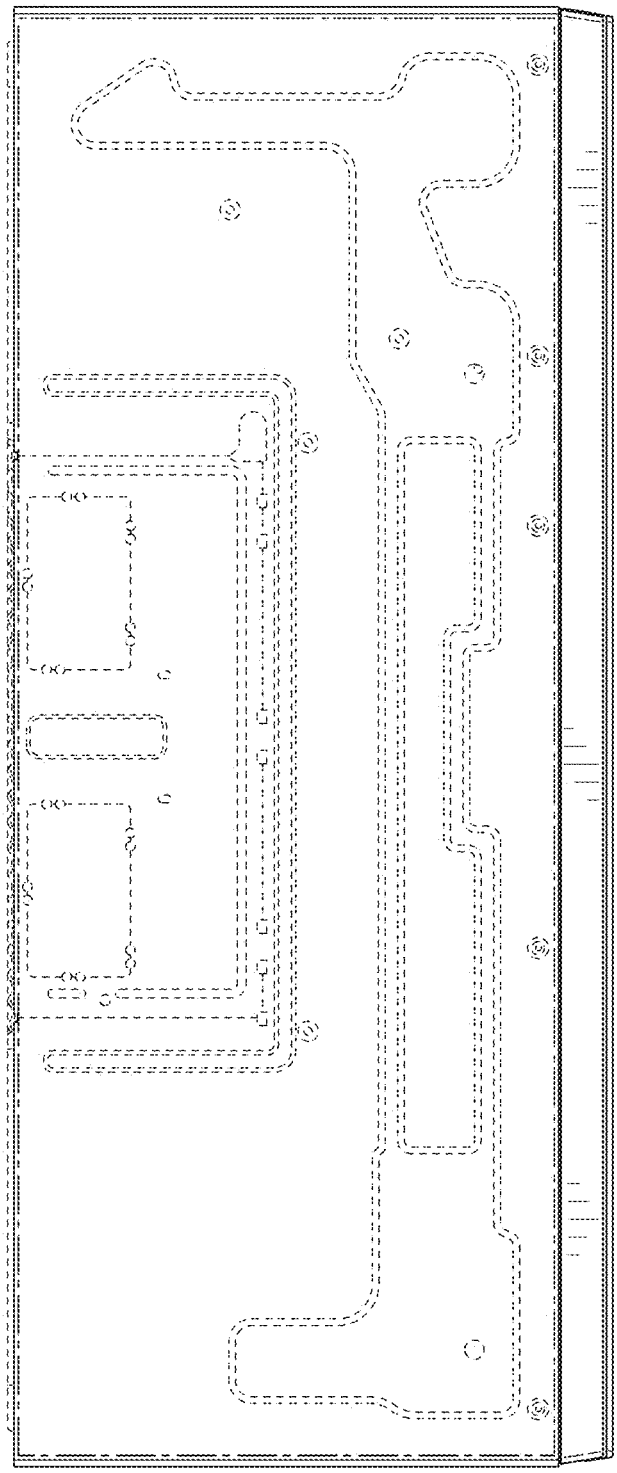

FIG. 6

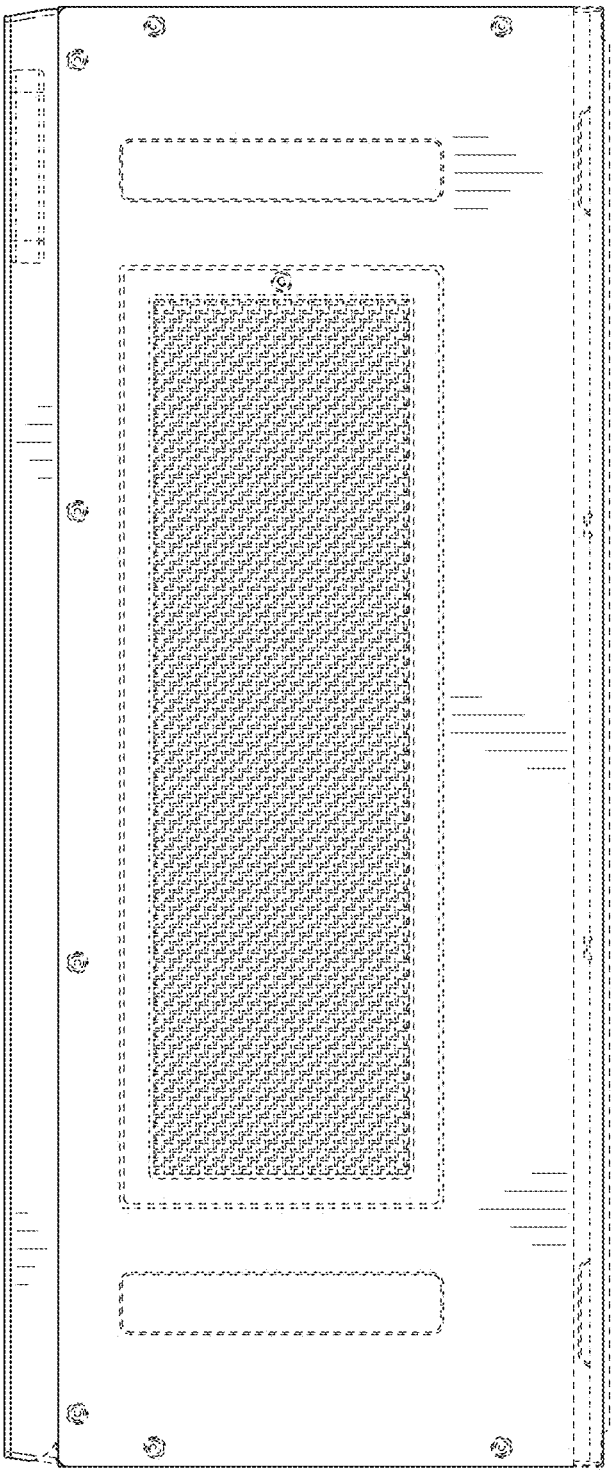

FIG. 7

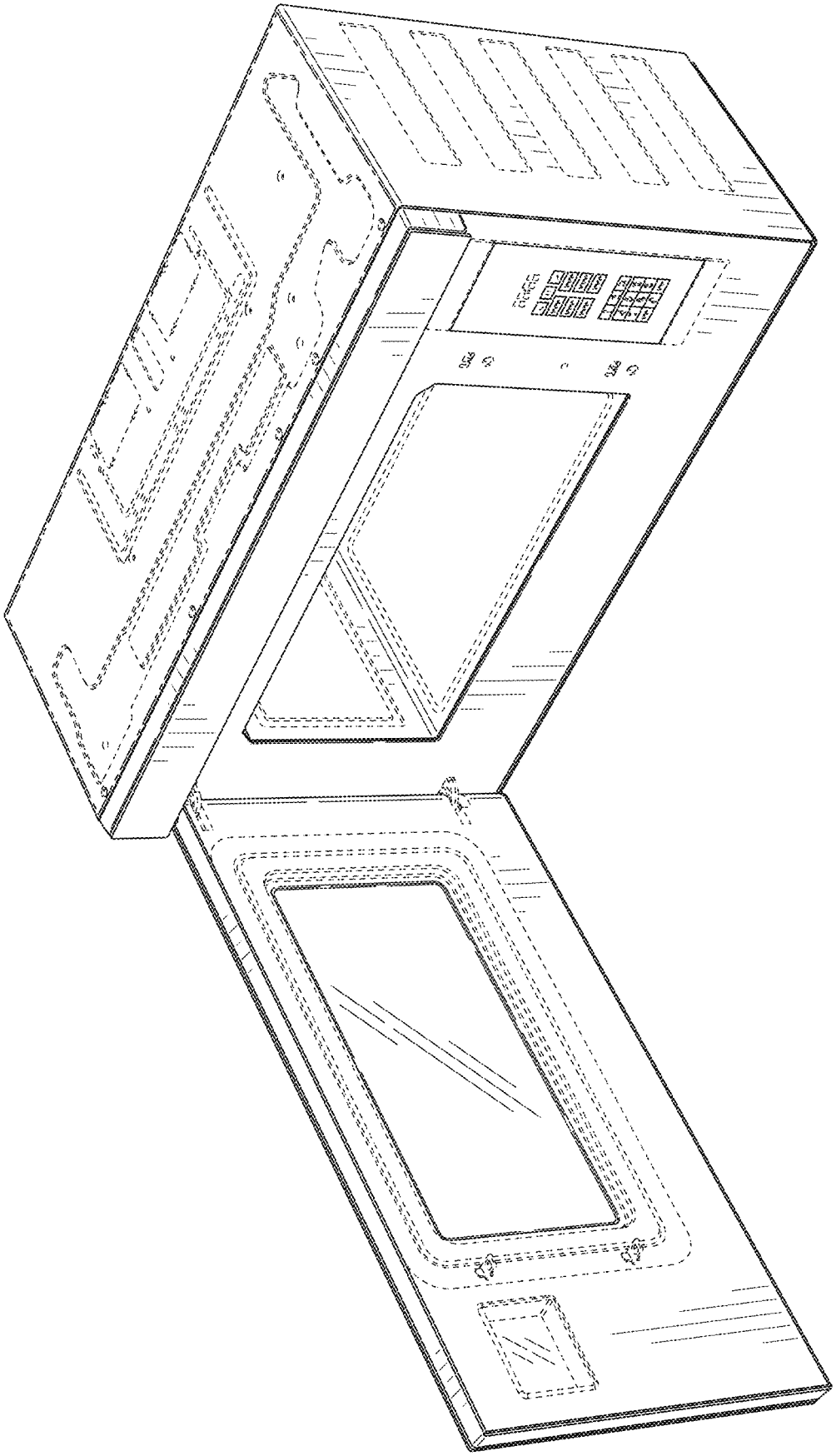

FIG. 8

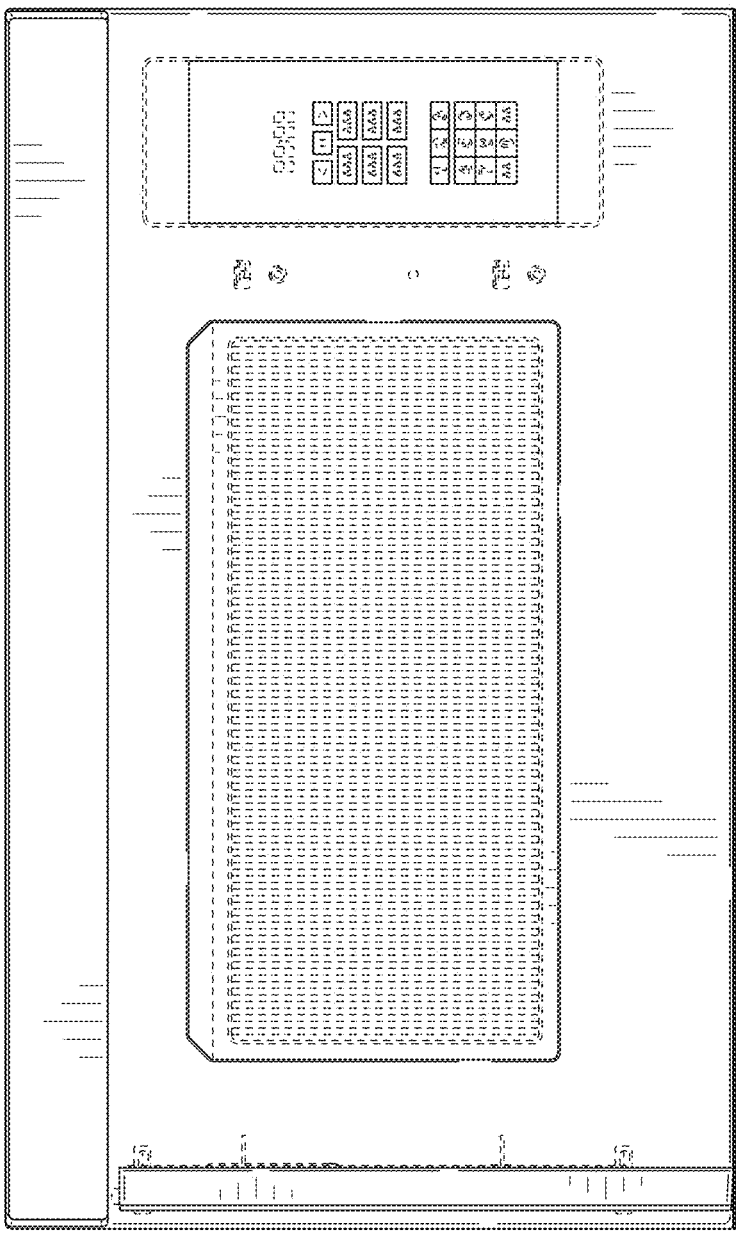

FIG. 9

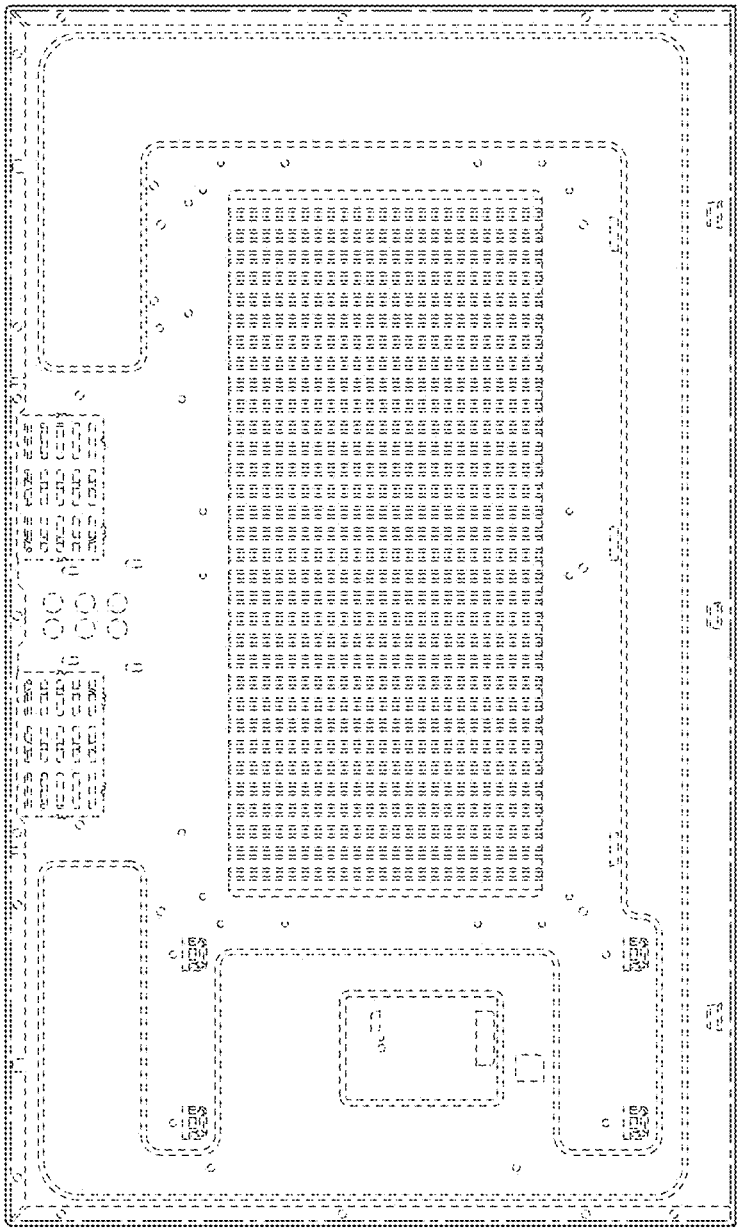

FIG. 10

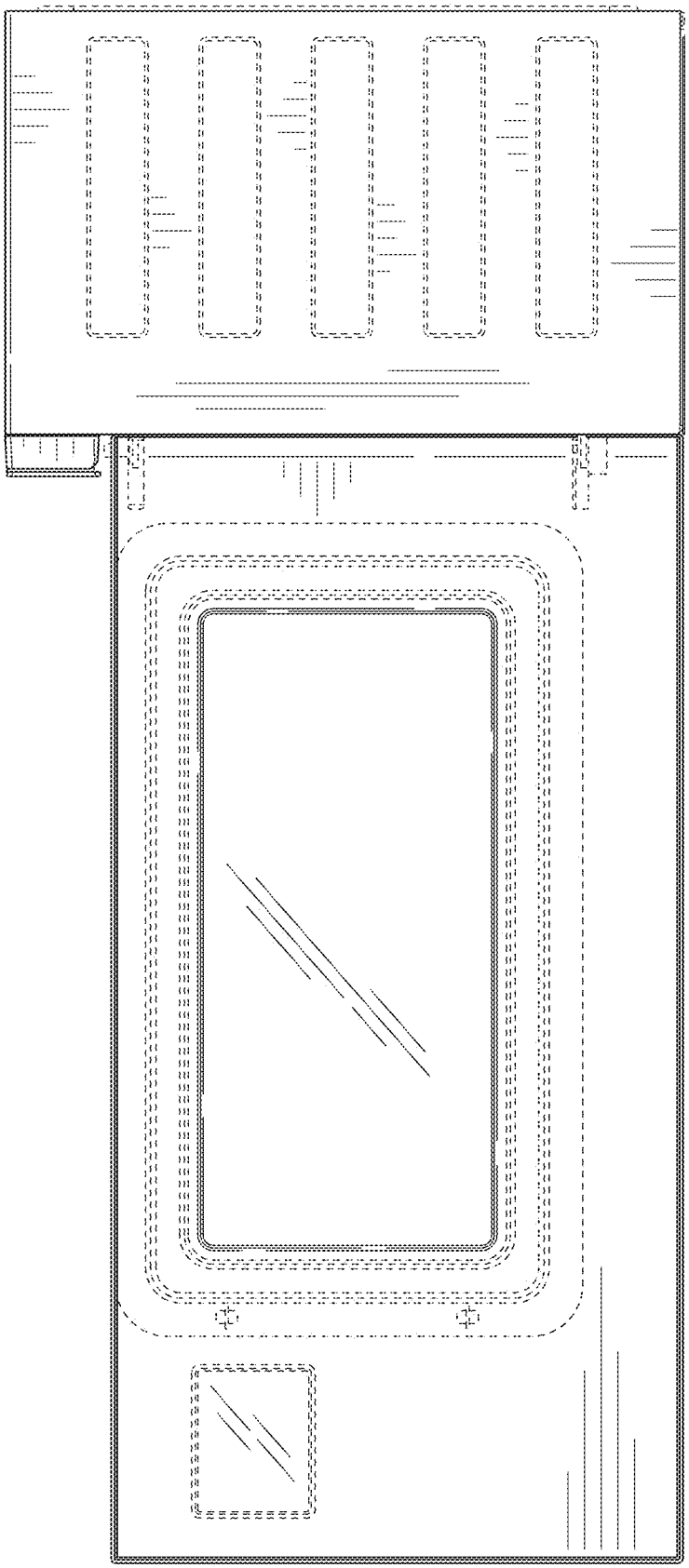

FIG. 11

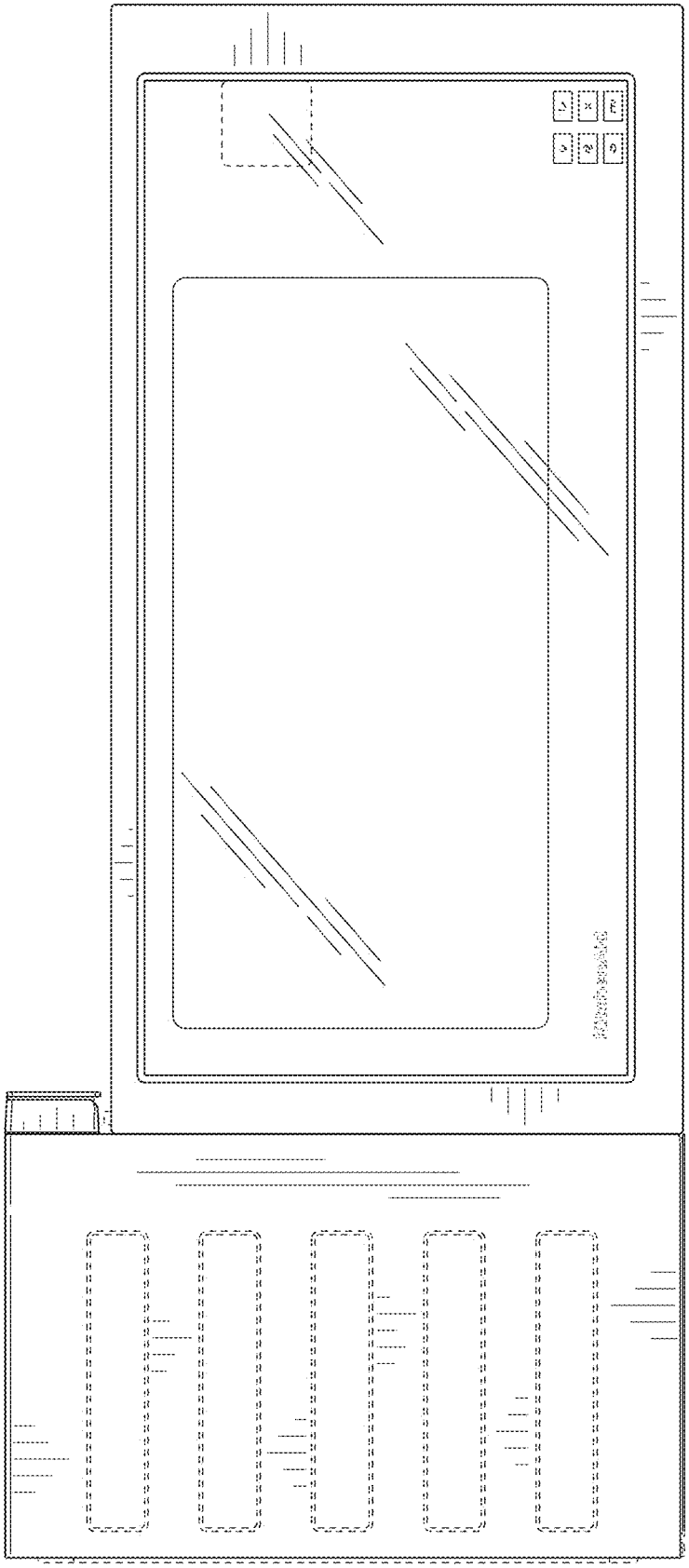

FIG. 12

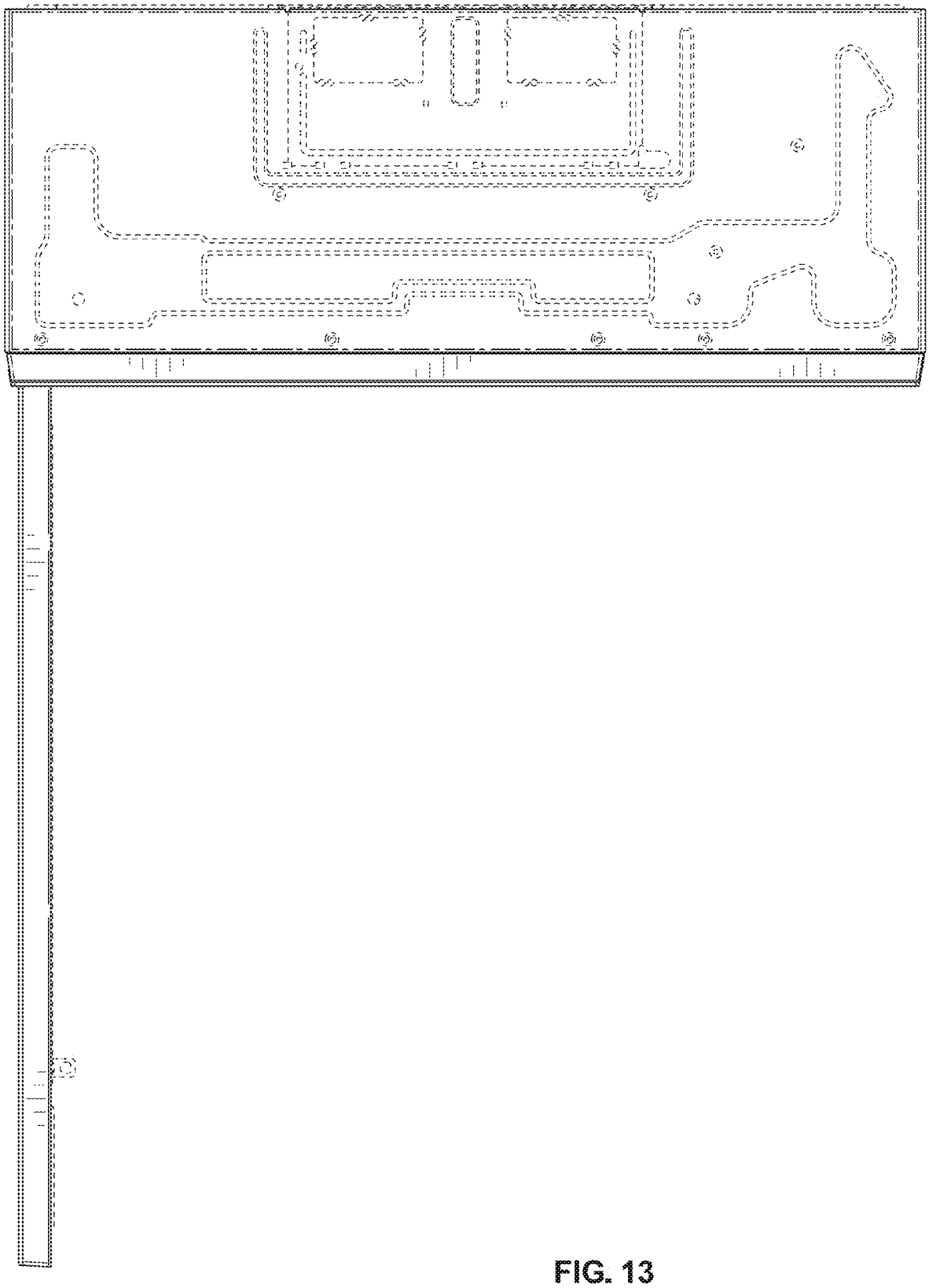

FIG. 13

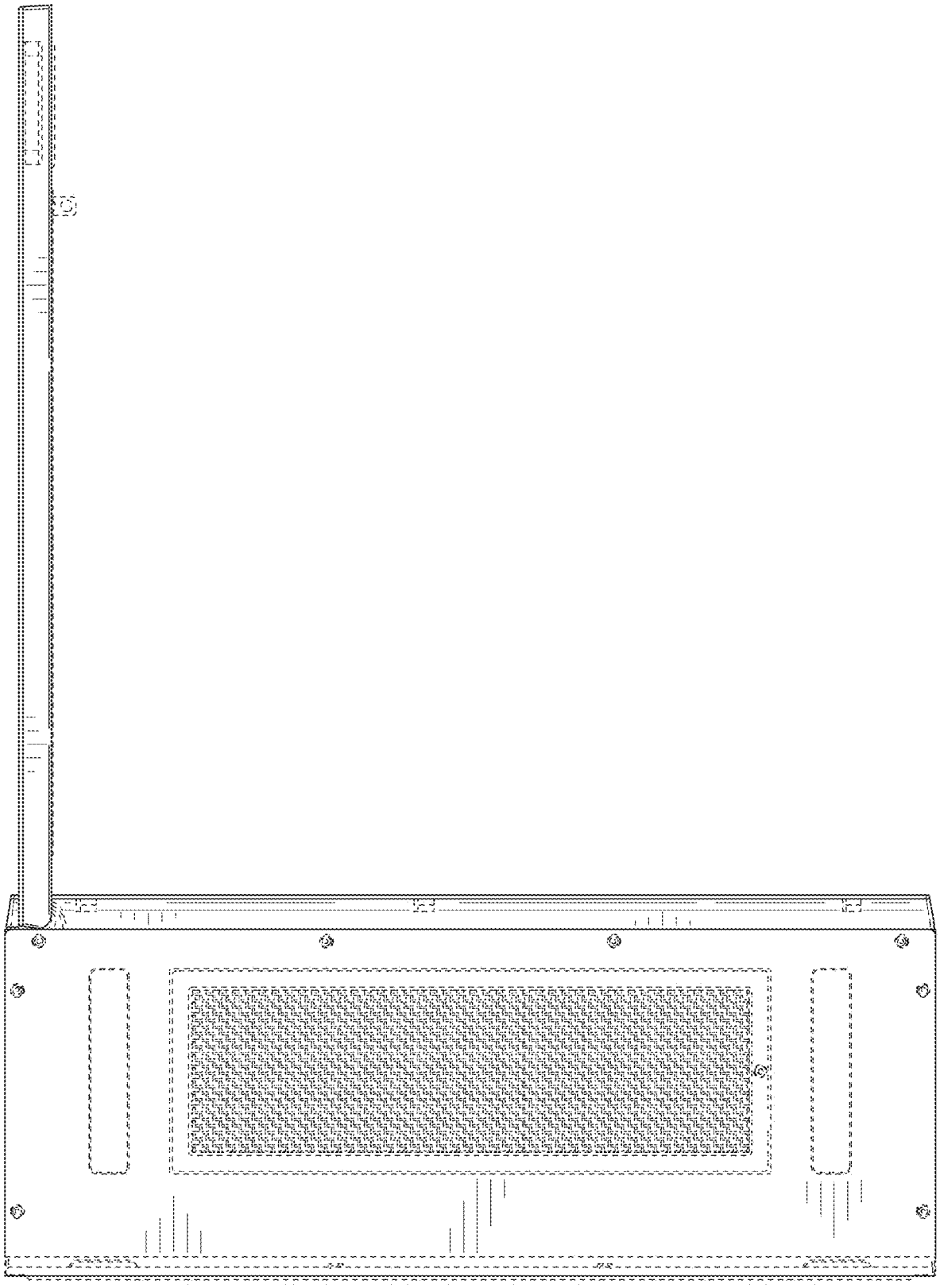

FIG. 14